Force measuring bearing
BZU-series

Stainless steel version, protection class IP67

High degree of protection and accuracy

High overload capacity due to mechanical stops

Low space requirement

Compatible with modern strain gauge amplifiers

Mounting type

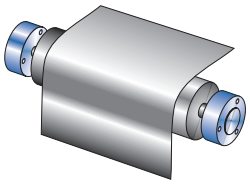

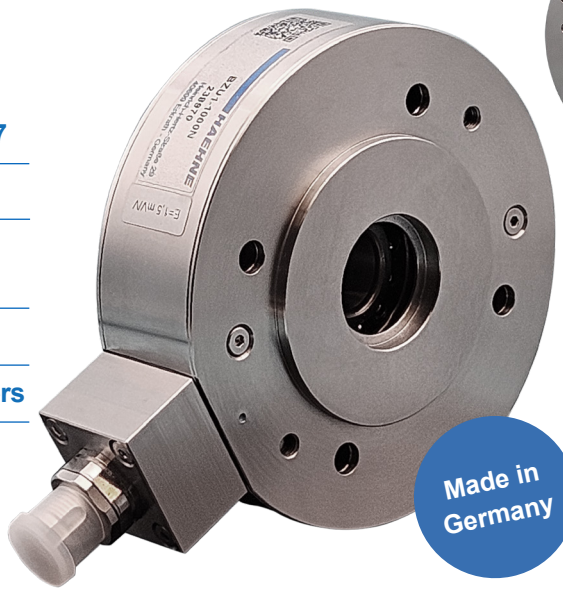

Cover in two versions

A: 3 Holes
B: 4 Holes
in the sensor

FORCE MEASURING BE-

The force measuring bearings in the **BZU-series** are designed to measure the tensile forces that occur during the production and processing of web materials. The flange bearing design is ideal for mounting on machine walls, but can also be mounted in conjunction with bearing blocks like a pedestal bearing.The force measuring sensors essentially consist of the bearing seat, the sensor elements and the housing with side covers.

The measuring elements are arranged according to the double bending beam principle. The forces acting on the bearing are recorded there recorded with strain gauges. For optimum signal utilization and temperature compensation the strain gages are connected to a full bridge.
A downstream amplifier from the *HAEHNE* range processes the measurement processing the measurement signals and supplies power to the strain gauge full bridge.

OPTIONS

Angled plug connection
S1: M12 (Metal)
S2: M12 (injected)

Straight connector
N1: M12 (Metal)
N2: M12 (injected)

Plug connection with cable
W5: 5m cable
W10: 10m cable
W20: 20m cable

ADVANCED OPTIONS

F Designed for operation in hazardous area, incl. J-Box

Elevated temperature
H1: up to 120°C

Increased accuracy
G2: 0,2%

L1: grease nipple

Increased protection class
Q1: for greases and oils
Q2: for acids and alkalis

Vacuum version
V: up to 10^{-7} millibar

CONNECTION

Cable socket S1

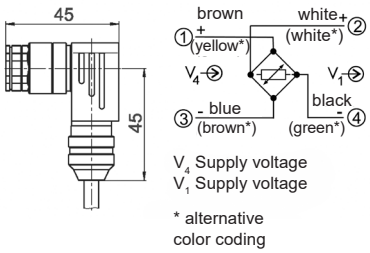

ORDERING EXAMPLE

BZU1-17A4-400-S1

- Type
- Size
- Shaft journal ø
- Design
- Cover
- Nominal force
- Variants/Options

SCOPE OF DELIVERY

Force measuring bearing in flange design with 5 m cable (PVC) and connection variant S1: plug connection, angled, M12, metal

ADDITIONALLY AVAILABLE

- Shaft seals*not in hazardous areas
- Various bearings
- Circlips
- Bearing pedestal

Force measuring bearing BZU-series

HAEHNE

haehne.de

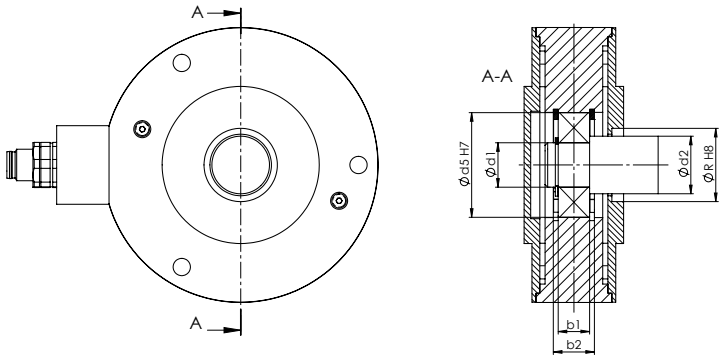

Size	Nominal force F [N]	ød1	ød2	ød5	øR	b1	b2	Bearing
BZU1	100; 200; 500; 1000	15	20	35	26	11	14,2	1202
		17	22	40	28	12	15,7	1203
BZU2	250; 500; 1000; 2000	20	25	52	32	15	19,3	1304
		25	32	52	42	15	19,3	1205
BZU3	500; 1000; 2500; 5000	35	45	80	68	21	26,3	1307
		40	50	80	70	18	23,3	1208
BZU4	2500; 5000; 10000; 15000	50	65	110	85	27	35,3	1310/21310
		60	70	110	90	28	36,3	2212/22212

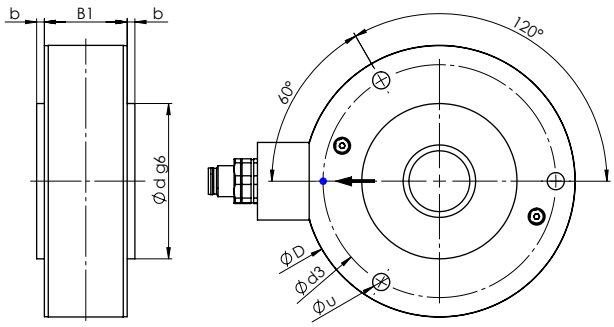

3-HOLE VERSION (COVER)

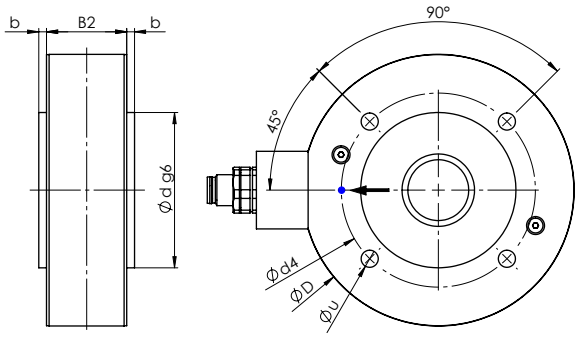

4-HOLE VERSION (COVER)

Size	øD	ød	b	øu	ød3	B1	ød4	B2
BZU1	105	60	3	6,6	90	32	75	31
BZU2	125	70	4	6,6	105	40	95	40,1
BZU3	175	100	4	9	155	57	135	57,9
BZU4	225	130	4	11	200	67	175	67,9

Technical data	% values related to the nominal force
Sizes	1, 2, 3, 4
Nominal forces (N)	100 … 15.000 N
Max. Working force	160%
Limit force	2.000%
Nominal characteristic value	1,5 mV/V
Accuracy	± 0.3 %
Reproducibility	0,05%
Measuring range	100:1
Nominal temperature range	+10...+60°C
Service temperature range	-10…+70°C
Bridge resistance	1000 Ohm
Max. Supply voltage	10 VDC
Protection class	up to IP 67
Material	Stainless steel

Design of the force measuring bearings

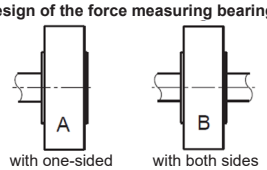

with one-sided open lid — with both sides open lid

Installation instructions (fixed/floating bearing) see practical guide

follow us on **LinkedIn**